LIGHTING

BENNER PRODUCTS

LED PANELS

ROUND

Code	Rated Power	Size	Shape	Light Guide	Warranty	Color Rendering (RA)	CCT	Light Color	Lumen efficacy	Input Voltage	Output	Power Factor (PF)	Flicker Free	Ingress Protection (IP)	Ambient Temperature (Ta)	Case Temperature (Tc)	Safety	Installation	Use	Dimmable	pcs/inner box	pcs/carton	MOQ
11000	3W	3 in (76.2 mm)	Recessed Round	Downlight Fixture	2 years	80	6000K	Blue-white	160 lumen	85-277V 50/60Hz	9V 300mA	0.5	Yes	20	45ºC	75ºC	Voltage Resistance Test	Recessed	Interior	No	1	100	1000
11001	6W	4 in (101.6 mm)	Recessed Round	Downlight Fixture	2 years	80	6000K	Blue-white	380 lumen	85-277V 50/60Hz	18V 300mA	0.5	Yes	20	45ºC	75ºC	Voltage Resistance Test	Recessed	Interior	No	1	100	1000
11002	12W	6 in (152.4 mm)	Recessed Round	Downlight Fixture	2 years	80	6000K	Blue-white	1020 lumen	85-277V 50/60Hz	36V 300mA	0.5	Yes	20	45ºC	75ºC	Voltage Resistance Test	Recessed	Interior	No	1	30	3000

SQUARE

Code	Rated Power	Size	Shape	Light Guide	Warranty	Color Rendering (RA)	CCT	Light Color	Lumen efficacy	Input Voltage	Output	Power Factor (PF)	Flicker Free	Ingress Protection (IP)	Ambient Temperature (Ta)	Case Temperature (Tc)	Safety	Installation	Use	Dimmable	pcs/inner box	pcs/carton	MOQ
11003	3W	3 in (76.2 mm)	Recessed Square	Downlight Fixture	2 years	80	6000K	Blue-white	160 lumen	85-277V 50/60Hz	9V 300mA	0.5	Yes	20	45ºC	75ºC	Voltage Resistance Test	Recessed	Interior	No	1	100	1000
11004	6W	4 in (101.6 mm)	Recessed Square	Downlight Fixture	2 years	80	6000K	Blue-white	380 lumen	85-277V 50/60Hz	18V 300mA	0.5	Yes	20	45ºC	75ºC	Voltage Resistance Test	Recessed	Interior	No	1	100	1000
11005	12W	6 in (152.4 mm)	Recessed Square	Downlight Fixture	2 years	80	6000K	Blue-white	1020 lumen	85-277V 50/60Hz	36V 300mA	0.5	Yes	20	45ºC	75ºC	Voltage Resistance Test	Recessed	Interior	No	1	30	3000

LED PANELS

ROUND
BLACK
WARRANTY: 2 YEAR

Code	Rated Power	Size	Opening	Shape	Light Guide	Color Rendering (RA)	CCT	Light Color	Lumen	Input Voltage	Output	Power Factor (PF)	Flicker Free	Ingress Protection (IP)	Ambient Temperature (Ta)	Case Temperature (Tc)	Relative Humidity	Installation	Use	Dimmable	pcs/inner box	pcs/carton	MOQ
11006	3W	3-5/8" (98 x 30 mm)	70mm	Recessed Round	Downlight Fixture	80	6500K	Blue-white	300 lumen	AC85-265V/50-60Hz	3-11 VDC	0.5	Yes	20	45ºC	75ºC	10% - 90% RH	Recessed	Interior	No	1	100	1000
11007	5W	4" (108 x 30 mm)	80mm	Recessed Round	Downlight Fixture	80	6500K	Blue-white	500 lumen	AC85-265V/50-60Hz	3-11 VDC	0.5	Yes	20	45ºC	75ºC	10% - 90% RH	Recessed	Interior	No	1	100	1000

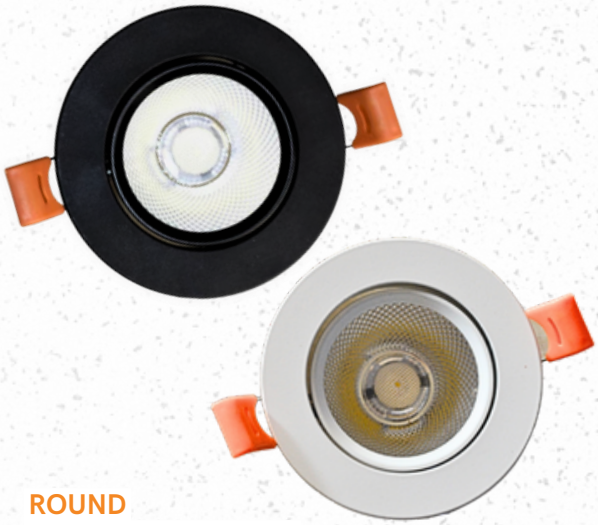

ROUND
WARRANTY: 2 YEAR

Code	Rated Power	Size	Opening	Shape	Light Guide	Color Rendering (RA)	CCT	Light Color	Lumen	Input Voltage	Output	Power Factor (PF)	Flicker Free	Ingress Protection (IP)	Ambient Temperature (Ta)	Case Temperature (Tc)	Relative Humidity	Installation	Use	Dimmable	pcs/inner box	pcs/carton	MOQ
11008 Black	5W	3-1/2" (85 x 48 mm)	70mm	Recessed Round	Downlight Fixture	80	6500K	Blue-white	500 lumen	AC85-265V/50-60Hz	12-18 VDC	0.5	Yes	20	45ºC	75ºC	10% - 90% RH	Recessed	Interior	No	1	100	1000
11009 White	5W	3-1/2" (85 x 48 mm)	70mm	Recessed Round	Downlight Fixture	80	6500K	Blue-white	500 lumen	AC85-265V/50-60Hz	12-18 VDC	0.5	Yes	20	45ºC	75ºC	10% - 90% RH	Recessed	Interior	No	1	100	1000

BACKLIT PANELS

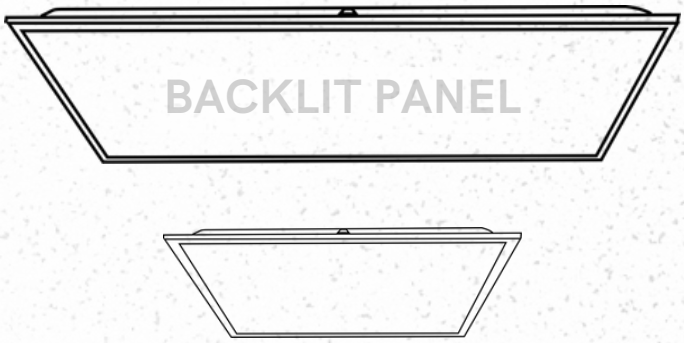

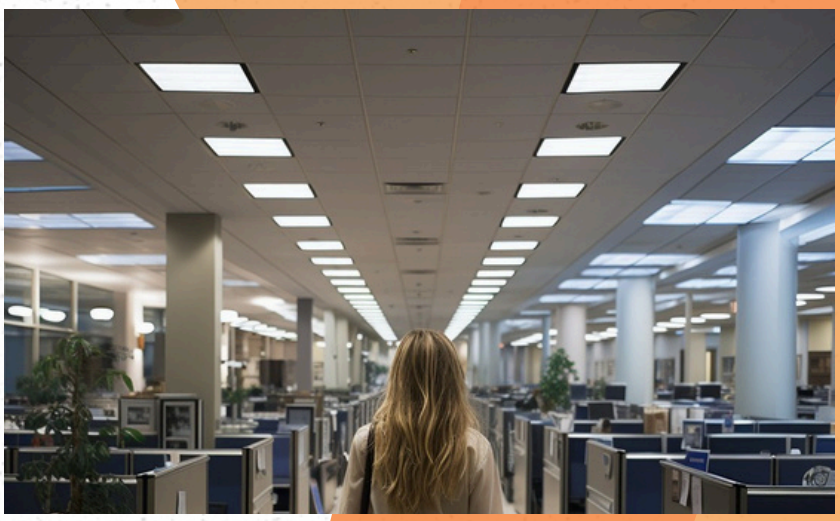

Code	Rated Power	Size	Shape	Light Guide	Warranty	Color Rendering (RA)	CCT	Light Color	Lumen efficacy	Input Voltage	Output	Power Factor (PF)	Flicker Free	Ingress Protection (IP)	Ambient Temperature (Ta)	Case Temperature (Tc)	Safety	Installation	Use	Dimmable	pcs/inner box	pcs/carton	MOQ
12000	40W	24" x 24" (603 x 603 mm)	Recessed Square	downward diffuser	3 years	80	6000K	Blue-white	110 lumen / W	85-277V 50/60Hz	27-42V 1000mA	1	Yes	20	45ºC	75ºC	Class II	Recessed mounting in grid ceilings	Interior	No	0	8	800
12001	80W	24" x 48" (603 x 1213 mm)	Recessed Square	downward diffuser	3 years	80	6000K	Blue-white	110 lumen / W	85-277V 50/60Hz	27-42V 1000mA	1	Yes	20	45ºC	75ºC	Class II	Recessed mounting in grid ceilings	Interior	No	1	4	800

FRAME PANELS

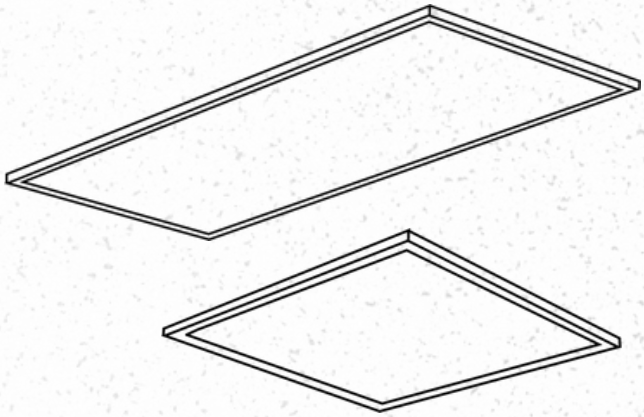

Code	Rated Power	Size	Shape	Light Guide	Warranty	Color Rendering (RA)	CCT	Light Color	Lumen efficacy	Input Voltage	Output	Power Factor (PF)	Flicker Free	Ingress Protection (IP)	Ambient Temperature (Ta)	Case Temperature (Tc)	Safety	Installation	Use	Dimmable	pcs/inner box	pcs/carton	MOQ
12002	40W	24" x 24" (603 x 603 mm)	Recessed Square	downward diffuser	3 years	80	6000K	Blue-white	110 lumen / W	85-277V 50/60Hz	27-42V 1000mA	1	Yes	20	45ºC	75ºC	Class II	Recessed mounting in grid ceilings	Interior	No	2	10	1000
12003	60W	24" x 48" (603 x 1213 mm)	Recessed Square	downward diffuser	3 years	80	6000K	Blue-white	110 lumen / W	85-277V 50/60Hz	27-42V 1400mA	1	Yes	20	45ºC	75ºC	Class II	Recessed mounting in grid ceilings	Interior	No	2	10	1000

LED GRILLE LIGHT

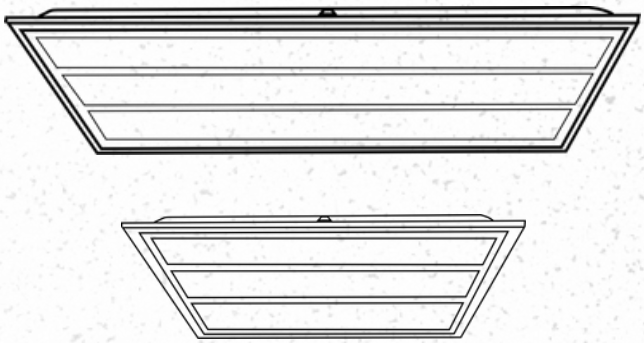

Code	Rated Power	Size	Opening	Shape	Light Guide	Color Rendering (RA)	CCT	Light Color	Lumen	Input Voltage	Output	Power Factor (PF)	Flicker Free	Ingress Protection (IP)	Ambient Temperature (Ta)	Case Temperature (Tc)	Relative Humidity	Installation	Use	Dimmable	pcs/inner box	pcs/carton	MOQ
12004	36W	24" x 24" (603 x 603 mm)	NA	Recessed Square	PS - Diffuser	≥Ra 80	6500K	Blue-white	3960 lumen	AC100-277V / 50-60HZ	24-42V 900mA	≥0.9	Yes	20	-20ºC	50ºC	10% - 90% RH	Recessed	Interior	No	2	10	1000
12005	60W	24" x 48" (603 x 1213 mm)	NA	Recessed Square	PS - Diffuser	≥Ra 80	6500K	Blue-white	6600 lumen	AC100-277V / 50-60HZ	24-42V 1550mA	≥0.9	Yes	20	-20ºC	50ºC	10% - 90% RH	Recessed	Interior	No	2	6	1000

Lighting fixtures are powerful tools in interior design that go beyond mere illumination. By selecting and utilizing the right fixtures, you can create functional, aesthetically pleasing spaces that promote the well-being of occupants.